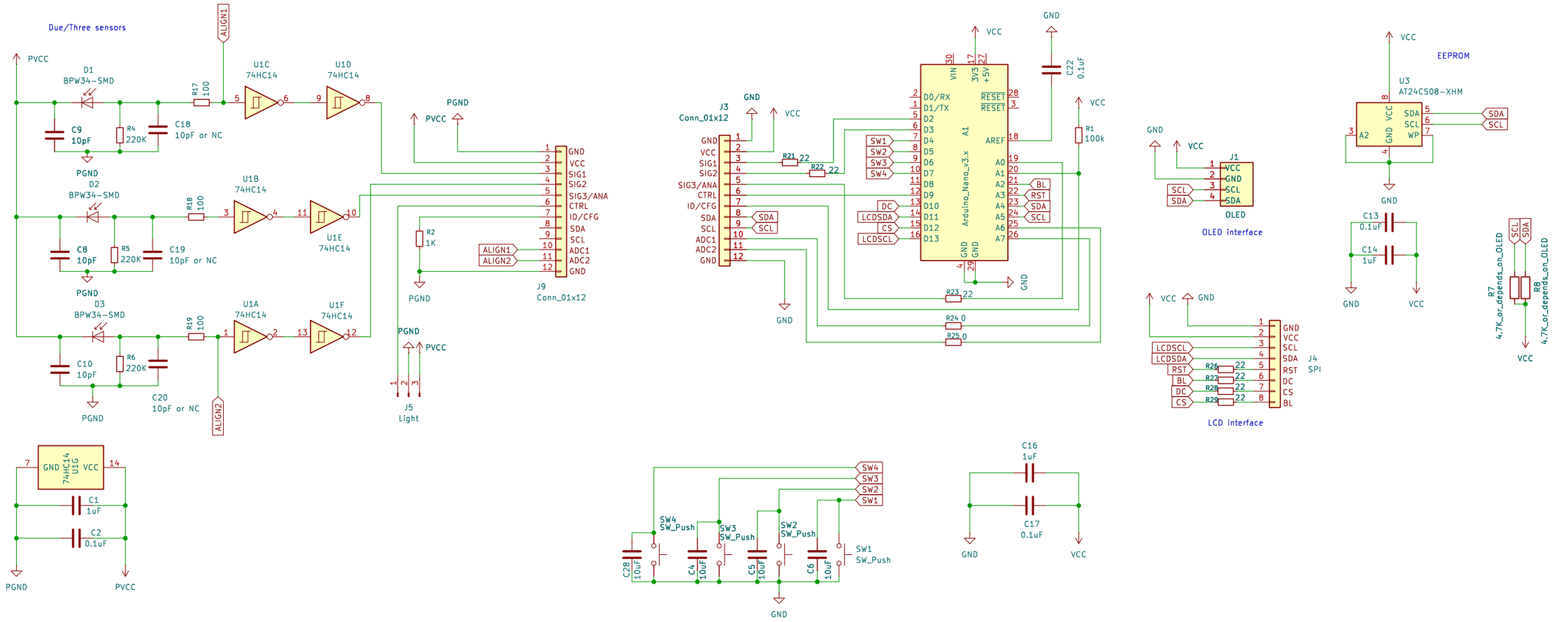


V1.0.3

Sheet: /
File: v1.0.3.kicad_sch

**Title:**

| Size: A3 | Date: | Rev: |
|---|---|---|
| KiCad E.D.A. 9.0.7 | | Id: 1/1 |